CODE	3-WAY BALL VALVE 2"M.+ADAPT.
453016H77	***MANUAL BALL VALVES*** **453** *3-way bolted ball valves with side inlet and adapter*

ARAG SPARE PARTS

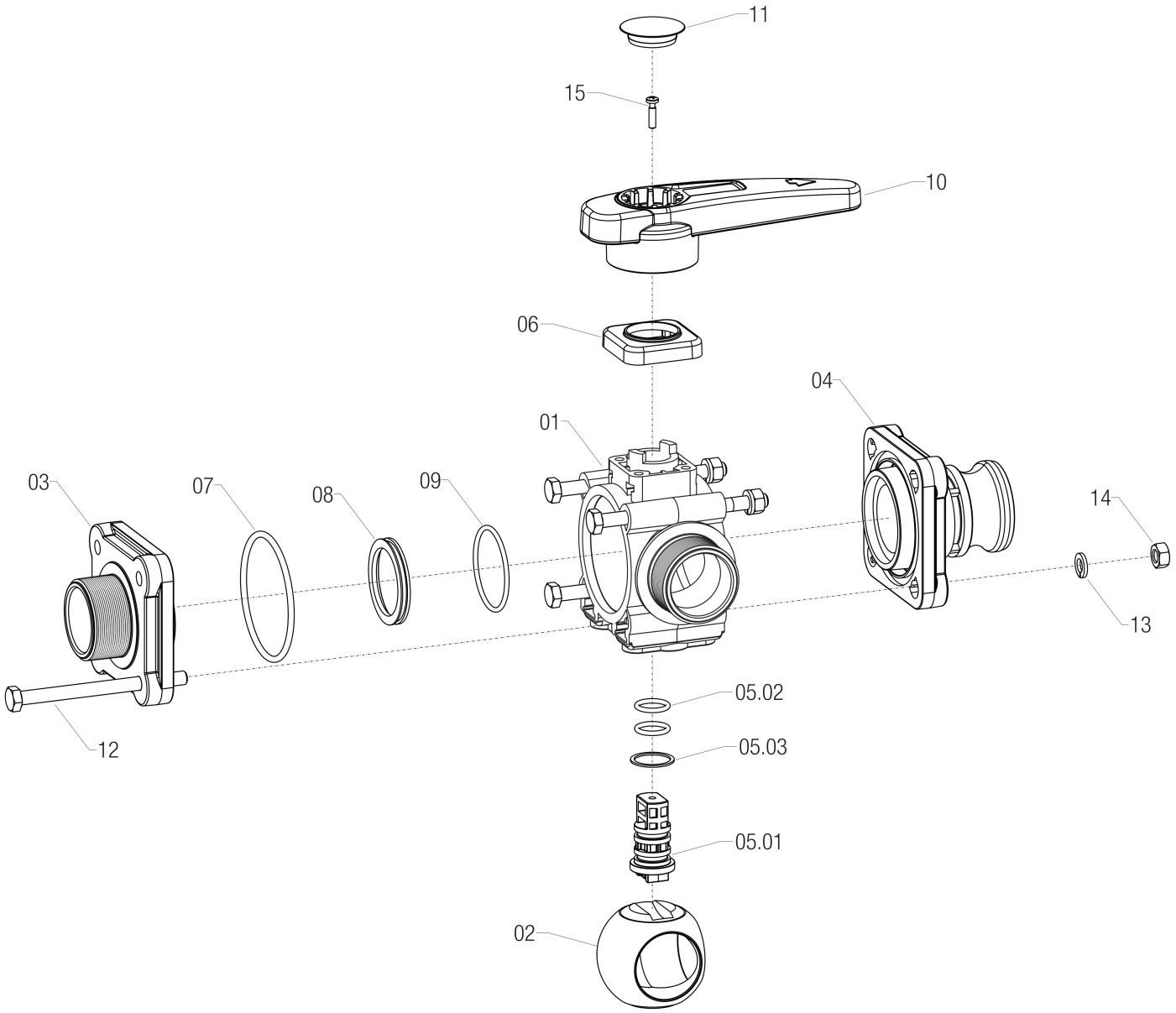

REFERENCE	CODE	DESCRIPTION
01	**453016E7.010**	3W VALVE BODY DN50 SIDE FITTING 2"M
02	**45301607.020**	SIDE BALL D.80 DN50 HOSE L
03	**453006E7.030**	VALVE FLANGE DN50 2"G MALE
04	**453006R7.030**	VALVE FLANGE DN50 2" ADAPTOR
	45300700.060	PIN VALVE DN65
05	**G11044**	OR 3,53X20,22 EPDM
	45300700.080	RING FOR VALVE PIVOT DN65
06	**45304700.100**	4/5W DOCKED LID FOR VALVE DN50
07	**318100.040**	O-RING 88,49 X 3,53 4350 EPDM

REFERENCE	CODE	DESCRIPTION
08	**45300607.070**	BALL HOLDER SEAT D.80 DN50
09	**454237.080**	GASKET (OR) 55,2X2,6
10	**45300600.050**	RED LEVER FOR VALVE DN50
11	**4542237.055**	LEVER PLUG 2" RED
12	**V1M266**	SCREW TE 10X130 INOX UNI5737
13	**B222J0**	WASHER GROVER 10,5X17,5X2,2 * INOX
14	**B10261**	NUT M 10X17X8 UNI558 * INOX
15	**V7M24K**	SELF-THREADED SCREW 6,0X25 INOX